KUUL C black ceiling lamp / plafond

https://ummo-lighting.com/en/kuul/1473-kuul-c-black-ceiling-lamp-plafond-5906733724587.html

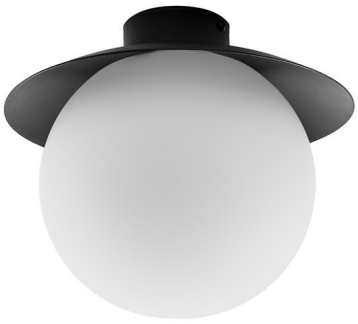

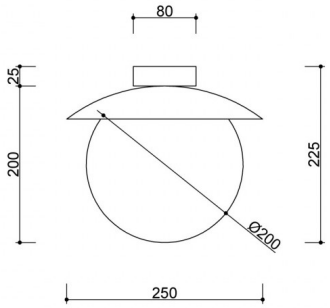

Price: 769,00 zł gross

Manufacturer: **UMMO Lighting**

Product code: **KLC12000**

EAN: **5906733724587**

Description

Design description

"Shall we make a snowman today?" - not this time. We made Kuul lamps out of snowballs - and the KUUL C is the most minimalist of them all. This plafond is a nod to simplicity that doesn't sacrifice character. What comes to the fore is a single, imposing sphere of milky white glass with a diameter of 20 cm - as if suspended in space, though solidly set in a black, white or burgundy base.

With its compact form, clean lines and perfect symmetry, KUUL C easily finds its way into modern settings - from subtle japanese, minimalist Scandinavian interiors to crisp modern.

Lamp components and functionality

KUUL C is a plafond based on a single glass sphere with a diameter of 20 cm, set on a square mount of 25x25 cm. The whole is made of powder-coated metal in black (Jet Black RAL 9005), white (RAL 9003) or burgundy - with a structural finish that gives the fixture a matte depth and elegance.

The light source, in the form of an interchangeable E27 bulb (LED up to 15W), allows you to choose the color and intensity of the light to suit the function of the room - from warm light in the bedroom to more neutral light in the lobby or kitchen.

Application and IP20 / IP44 protection class

KUUL C can serve as both a main light in small spaces and a subtle lighting accent in larger interiors - for example, as a recurring module in a long corridor.

Thanks to its availability in IP20 and IP44 waterproof classes, the plafond will also be suitable for rooms with higher humidity, such as bathrooms, hallways and kitchens (outside the zone of direct contact with water).

Handmade and unique character

Each lamp in the KUUL series is assembled by hand, with attention to detail and quality of finish. It's not a mass product, but authentic craftsmanship - that's why each piece brings not only light, but also peace, rhythm and softness of form to the interior.

KUUL C - key features

- Simple, expressive form with a single spherical shade ⌀20 cm.
- Available in three colors: black RAL 9005, white RAL 9003 and burgundy RAL 3004.
- Interchangeable E27 LED light source (up to 15W) - possibility to adjust the light to the interior.
- Two variants of waterproofing - IP20 and IP44.
- Handmade - uniqueness and careful quality.

Technical information

Light source included	None
Screw type	E27 LED
Max wattage	1 x 15W
IP degree	IP20
Length	25cm
Width	25cm
Height	22.5cm
Diameter of the ceiling cover	8cm
Made of	metal / glass
Colour	black (Jet Black RAL 9005)
Lampshade color	white
Warranty	24 months
Comments	custom-made product
Type / function	ceiling lamp, plafond
Power supply	~230V, 50/60 Hz

Other finishes

