KUUL E black ceiling pendant lamp

https://ummo-lighting.com/en/kuul/1476-kuul-e-black-ceiling-pendant-lamp-5906733724662.html



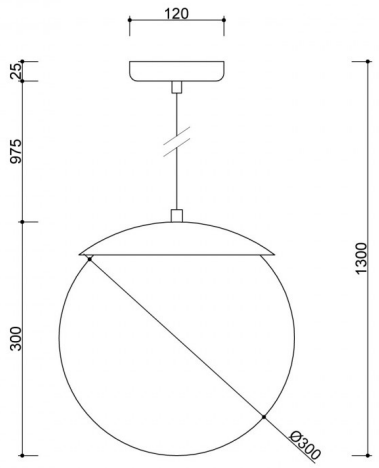

Price: **839,00 zł** gross

Reduction: -115,50 zł net

Old price: 989,00 zł gross

Manufacturer: **UMMO Lighting**

Product code: **KLE122P0**

EAN: **5906733724662**

Description

Design description

KUUL E is a tribute to simplicity and harmony of form. Its geometric body is based on a perfect sphere, gently "pressed" by a flat metal bowl. Such a contrast creates a modern yet subtle silhouette, which will fit perfectly in many interior styles - from japanese to minimalism to modern loft. Soft light penetrating through the milky white shade creates a pleasant mood and emphasizes the aesthetic qualities of the fixture.

Lamp components and functionality

The lamp is made of high-quality powder-coated metal and opal glass. The lampshade with a diameter of 30 cm gives the lamp a visual lightness, and at the same time provides adequate dispersion of light. The total length of the fixture is 130 cm, of which the polyester braided cord is 97.5 cm long - it can be easily adjusted to the height of the room. The E27 socket allows the use of standard LED bulbs up to 15W - this is functionality and freedom in the choice of light source.

Application and IP20 protection class

KUUL E was designed for dry interiors, such as living room, bedroom, dining room or commercial space. The IP20 protection class means that the lamp is not suitable for damp rooms, but it is perfect for places where atmosphere, aesthetics and refined details matter.

Available in three color variants - black (RAL 9005), white (RAL 9003) and burgundy (RAL 3004) - makes it easy to match it with different interior color concepts. KUUL E looks great solo, as well as in the company of other lamps from the KUUL collection.

Handmade and unique character

Each piece of KUUL E is assembled by hand, with attention to precision and quality of finish. It is not only lighting, but also a decorative element of the interior - for those who are looking for a lamp of remarkable character and high aesthetics.

KUUL E - key features

- Spherical milk-white glass lampshade with a diameter of 30 cm - provides soft, even light.
- Geometric design with a distinctive flat canopy - a modern form that attracts the eye.
- Interchangeable light source with E27 thread - max 15W LED.
- Three color options: black (RAL 9005), white (RAL 9003) and burgundy (RAL 3004) - to match different arrangements.
- IP20 rating - ideal for dry residential and commercial interiors.
- Manual assembly - high quality workmanship and attention to detail.
- Universal design - will work well in japanese, modern, minimalist, classic and loft styles.

Technical information

Light source included	None
Screw type	E27 LED
Max wattage	1 x 15W
IP degree	IP20
Cable/-s lenght	97.5cm
Length	30cm
Width	30cm
Height	30cm
Diameter	30cm
Diameter of the ceiling cover	12cm
Made of	metal / glass
Colour	black (Jet Black RAL 9005)
Cable color	black
Braid type	polyester

Lampshade color	white
Warranty	24 months
Comments	custom-made product
Type / function	ceiling lamp, pedant lamp
Overall length	130cm
Power supply	~230V, 50/60 Hz

Other finishes

