PLAAT B white ceiling lamp / plafond with brass

https://ummo-lighting.com/en/plaat/3706-plaat-b-white-ceiling-lamp-plafond-with-brass-5906733725362.html

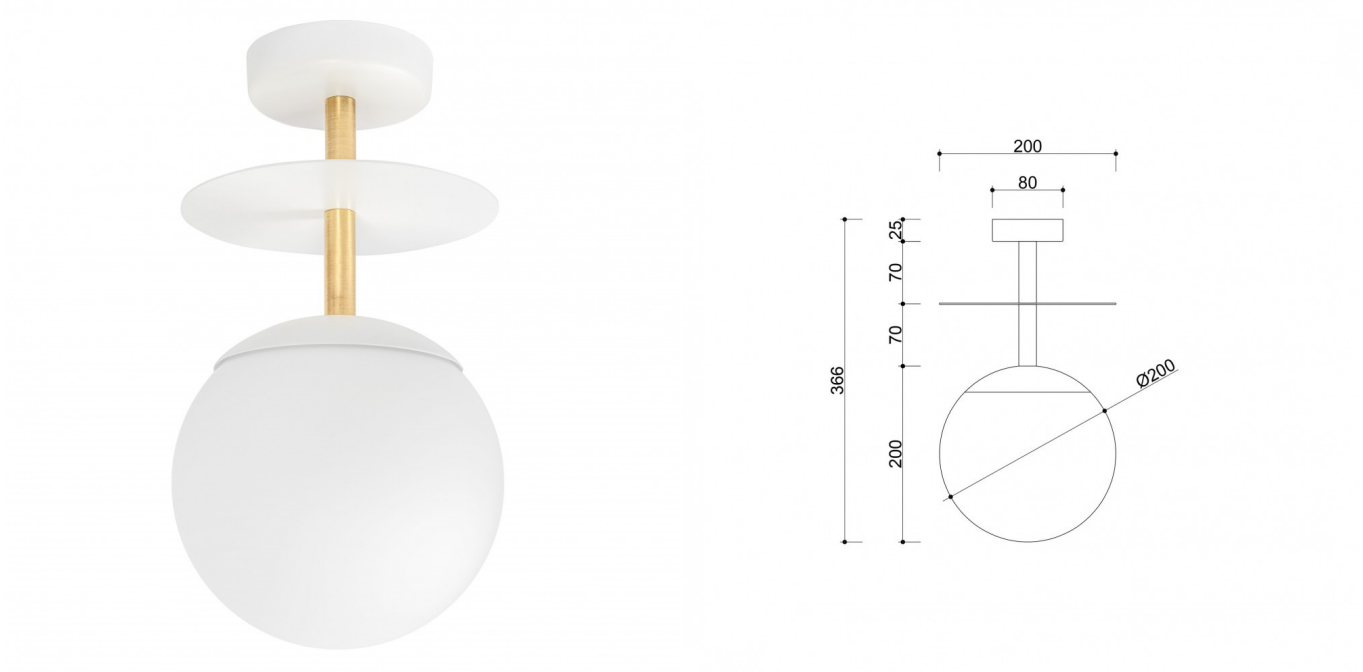

Price: 1 019,00 zł gross

Manufacturer: **UMMO Lighting**

Product code: **PLB11303**

EAN: **5906733725362**

Description

The PLAAT collection with the poet and writer Sylvia Plath is certainly connected by a glass shade :) The milky white sphere, characteristic of UMMO lamps, is created to discover the poetry of light. The metal tubes are cut by a thin disk which, like an umbrella, covers a large lampshade in an elegant cap. It is the metal disk that distinguishes PLAAT ceiling lamps, available in two colors: black and white. UMMO lighting is manually assembled from high-quality components in our studio in Gdynia. With light we are for Mr. PLAAT :)

The PLAAT Premium series is the basic models in brass. Brass elements are ground by us and specially protected against discoloration. PLAAT hanging lamps are available with a black or white hat and disc. We attach gloves to brass lamps, thanks to which there will be no chemical reaction during assembly. As you can see, we are noble with light :)

Technical information

Light source included	None
Screw type	E27 LED
Input voltage	220-240V
Max wattage	1 x 15W
IP degree	IP20
Width	20cm
Height	37cm
Depth	20cm
Diameter	20cm
Diameter of the ceiling cover	8cm
Made of	metal / brass / glass
Colour	white (Signal White RAL 9003) / brass
Lampshade color	white
Diameter of the lampshade	20cm
Frame color	white
Warranty	24 months
Comments	custom-made product
Type / function	ceiling lamp, plafond

Other finishes

