PLAAT A 3L white triple ceiling lamp

https://ummo-lighting.com/en/plaat/6534-plaat-a-3l-white-triple-ceiling-lamp-5906733723894.html

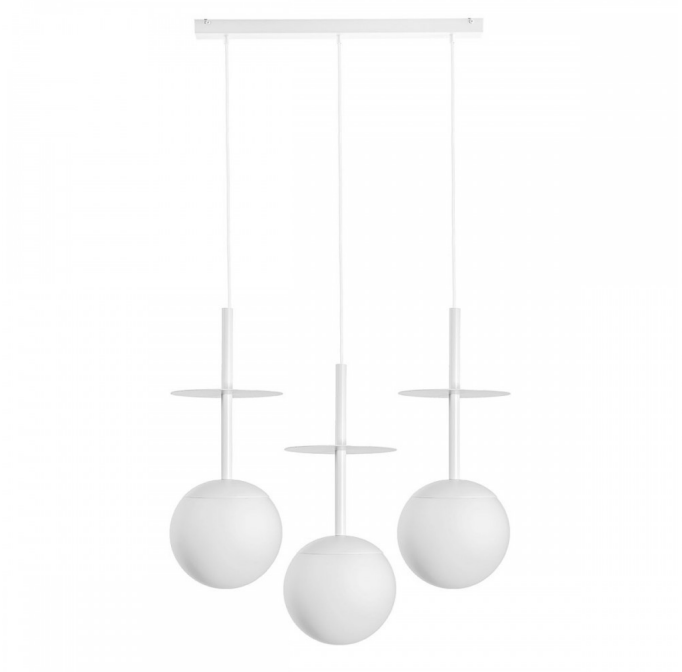

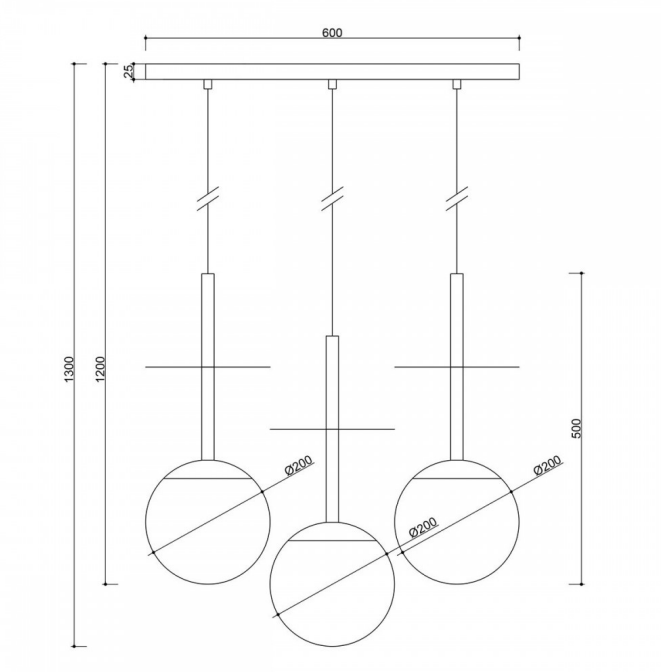

Price: 2 199,00 zł gross

Manufacturer: **UMMO Lighting**

Product code: **PLL311P0**

EAN: **5906733723894**

Description

The PLAAT collection with the poet and writer Sylvia Plath is certainly connected by a glass shade :) The milky white sphere, characteristic of UMMO lamps, is created to discover the poetry of light. The metal tubes are cut by a thin disk which, like an umbrella, covers a large lampshade in an elegant cap. It is the metal disc that distinguishes PLAAT luminaires, available in two color variants: black and white, and black and white with gold elements. In this series you will find, depending on the dimensions of the tubes, hanging lamps, ceiling lamps, plafonds and table lamps. UMMO lighting is hand-assembled from high-quality components in our workshop in Gdynia. We are with the light for Mr. PLAAT :)

Technical information

Light source included	None
Screw type	E27 LED
Input voltage	220-240V
Max wattage	3 x 15W
IP degree	IP20
Cable/-s lenght	70cm, 80cm, 70cm
Length	130cm
Width	60cm
Made of	metal / glass
Colour	white (Signal White RAL 9003)
Cable color	white
Braid type	polyester
Lampshade color	white
Diameter of the lampshade	20cm
Frame color	white
Dimmable	yes
Warranty	24 months
Comments	custom-made product
Type / function	ceiling lamp, pedant lamp

Other finishes

