PLAAT C white wall lamp / sconce IP44

https://ummo-lighting.com/en/plaat/7452-plaat-c-white-wall-lamp-sconce-ip44-5906733726222.html



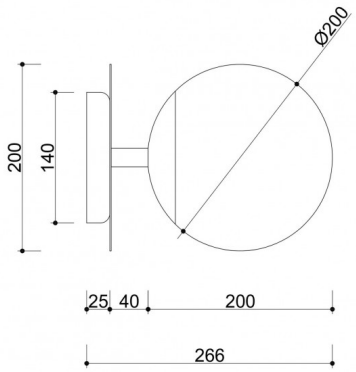

Price: **959,00 zł** gross

Manufacturer: **UMMO Lighting**

Product code: **PLC110S0**

EAN: **5906733726222**

Description

The PLAAT collection with the poet and writer Sylvia Plath is certainly connected by a glass lampshade :) The milky sphere, characteristic of UMMO lamps, is created to discover the poetry of light. The metal tubes are cut by a thin disk which covers a large lampshade. It looks just like an umbrella :) The metal disk, that distinguishes the PLAAT line, appearing in two colors: black and white or black and white with gold elements. Depending on the size of the tube, you can find in the series hanging lamps, ceiling lamps, plafonds as well as table lamp. UMMO lighting is manually assembled from high quality components in our studio in Gdynia. PLAAT, not a plate :)

Technical information

Light source included	None
Screw type	E27 LED
Max wattage	1 x 15W
IP degree	IP44
Length	26.6cm
Width	20cm
Height	20cm
Diameter of the ceiling cover	14cm
Made of	metal / glass
Colour	white (Signal White RAL 9003)
Lampshade color	white
Warranty	24 months
Comments	custom-made product
Type / function	wall lamp, sconce
Power supply	~230V, 50/60 Hz

Other finishes




