SUPURU yellow ceiling pendant lamp with black tube

https://ummo-lighting.com/en/supuru/7617-supuru-yellow-ceiling-pendant-lamp-with-black-tube-5906733728516.html



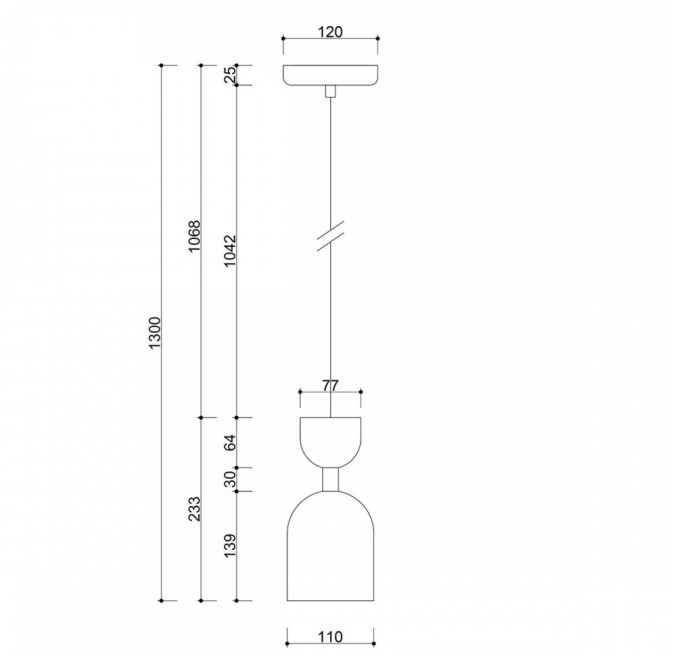

Price: **599,00 zł** gross

Manufacturer: **UMMO Lighting**

Product code: **SUA1211P0**

EAN: **5906733728516**

Description

Design description

SUPURU lamp in a wide range of UMMO finishes (white RAL 9003, black RAL 9005, yellow RAL 1016, melon RAL 1028, pink RAL 3014, red-orange RAL 2002, burgundy RAL 3004, navy blue RAL 5003, blue RAL 5014, olive RAL 6013, beige) is the essence of minimalist form that speaks the language of subtlety. Its balanced cylindrical body is complemented by a steel tube, which not only has a structural function, but also an aesthetic one - introducing an element of graphic balance and lightness into the design. The whole is closed by two lampshades, ending in domes. SUPURU's design refers to the Japanese idea of simplicity and harmony, fitting into the modern design language from the borderline of japandi, modern classic and minimalist styles. It is a fixture that does not dominate a space, but complements it - discreetly, consistently and sensitively.

The name "SUPURU" can be interpreted as a phonetic reference to the Japanese word "subaru," which means "unification" or "gathering." This reference underscores the idea of harmony and unity conveyed by the lamp's design.

Lamp components and functionality

The body of the lamp is made of high-quality powder-coated metal, whose surface impresses with a velvety finish. The central axis of the structure - a metal tube - gives the whole a distinctive rhythm and visual lightness. SUPURU is equipped with a fixture with an interchangeable LED bulb of GU10 type with a maximum power of 10W, which allows the user to select both the color and intensity of light according to individual preferences. This is a lamp that will be perfect for smaller spaces or as a zone lighting - over a table, in a passageway or in a bedroom.

Application and IP20 protection class

With an IP20 rating, SUPURU is designed for use in dry interiors: living room, dining room, home office, living room, hotel lobby or restaurant. Its geometric economy of form makes it work well with both arrangements based on natural materials and more graphic, modern spaces.
The Supuru pendant lamp goes well with the wall lamp from the same series, creating a coherent, modern lighting set. This combination allows you to maintain visual continuity in the space, combining ceiling and wall lighting into one harmonious composition.

Handcrafted and unique character

Each SUPURU lamp is assembled by hand in a Polish manufactory, which means that each piece goes through an individual production process. It's not a mass product - it's a project created for a customer who appreciates craftsmanship precision and timeless design.
By combining classic forms with modern details, SENKEI A is an excellent choice for those looking for unique lighting for their interior. We invite you to purchase and experience light in a whole new perspective, the perspective of the UMMO design world.

Key features:

- Minimalist design inspired by Japanese tradition.
- Handcrafted to ensure the uniqueness of the product.
- Wide range of trending colors.
- Noble finishing materials: metal.
- Protection class: IP20 - for indoor use.
- Possibility to personalize the finish within the UMMO color collection.

Technical information

Light source included	None
Screw type	GU10 LED
Max wattage	1 x 10W
IP degree	IP20
Cable/-s lenght	106.7cm
Length	11cm
Width	11cm
Height	23.3cm
Diameter of the ceiling cover	12cm
Made of	metal
Colour	yellow (Sulfur Yellow RAL 1016)
Cable color	black
Warranty	24 months
Comments	custom-made product
Type / function	ceiling lamp, pedant lamp
Overall length	130cm
Power supply	~230V, 50/60 Hz

Other finishes





