# KUUL D Red-Orange Wall Lamp / Sconce

https://ummo-lighting.com/en/kuul/7815-kuul-d-black-wall-lamp-sconce-5906733727540.html



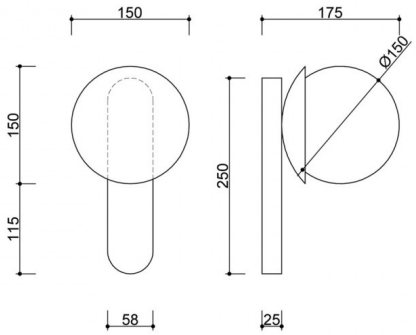


Price: **609,00 zł** gross

Manufacturer: **UMMO Lighting**

Product code: **KLD112000**

EAN: **5906733727540**

## Description

### Design description

The KUUL D wall lamp is a wall lamp that surprises with its simplicity and graphic clarity. At first glance, it brings to mind a snowball stuck to the wall - no wonder, since the entire KUUL collection is inspired precisely by the form of spheres. Playing with geometry is combined here with functional design, resulting in modern but warm lighting that attracts attention rather than dominates the space.

The minimalist form consisting of a vertical metal fixture and a spherical, milky white lampshade with a diameter of 15 cm was designed with modern interiors in mind: from japanese to loft, from home corridors to hotel lobbies.

### Lamp components and functionality

KUUL D is made of high-quality metal painted in a structured color - available in deep black (RAL 9005), pure white (RAL 9003) and elegant burgundy (RAL 3004). Its soft lines and refined finish make it perfect both as a subtle decoration and as a source of light.

The interior of the lamp conceals a socket for a G9 bulb (max 12W LED), which gives the user the freedom to choose the power and color of the light. The milk glass shade disperses the light evenly, creating an atmospheric glow - ideal for evening relaxation or gentle illumination of passageways.

## Application and protection class IP20 / IP44

KUUL D wall lamp is available in two versions:

- **IP20** - for dry spaces such as living rooms, bedrooms, corridors or offices.
- **IP44** - for rooms with higher humidity, including bathrooms (e.g. near the mirror), laundry rooms, as well as entrance areas and covered terraces.

So you can easily match it to different functions and locations in your home or commercial space.

## Handcrafted and unique character

Each KUUL D lamp is assembled by hand, with attention to quality detail and precision assembly. It's not a mass product - it's lighting created for those who value informed choice and durable design.

The KUUL D wall lamp impresses as a soloist, but performs best as part of a larger arrangement with the KUUL A, B and C lamps. Together they form a cohesive light family, ready to fill any interior with harmony of light and form.

**KUUL D - key features**

- Wall lamp with a modern, minimalist design.
- Three color versions: black (RAL 9005), white (RAL 9003), burgundy (RAL 3004).
- Two versions of waterproofing: IP20 (for dry interiors) and IP44 (for bathrooms and wet areas).
- G9 light source (max 12W LED) - you can choose the color and power of the light.
- High-quality materials: metal and glass, powder coating.
- Universal use: for living room, bedroom, hallway, bathroom or hotel.
- Hand assembling - precision workmanship and individual character of each piece.

# Technical information

| | |
|---|---|
| **Light source included** | None |
| **Screw type** | G9 LED |
| **Max wattage** | 1 x 12W |
| **IP degree** | IP20 |
| **Length** | 17.5cm |
| **Width** | 15cm |
| **Height** | 26.5cm |
| **Length of the ceiling slat** | 25cm x 5.8cm |
| **Made of** | metal / glass |
| **Colour** | red-orange (Vermilion RAL 2002) |
| **Lampshade color** | white |
| **Warranty** | 24 months |
| **Comments** | custom-made product |
| **Type / function** | wall lamp, sconce |
| **Power supply** | ~230V, 50/60 Hz |

# Other finishes





